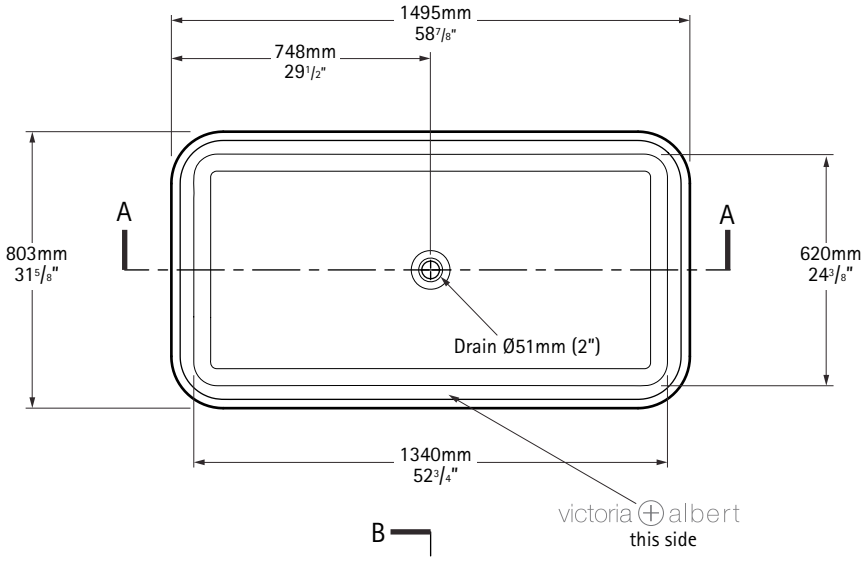

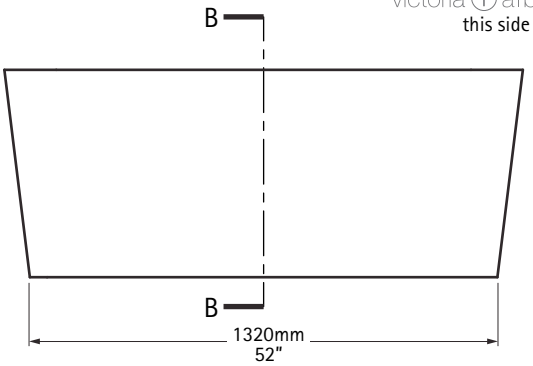

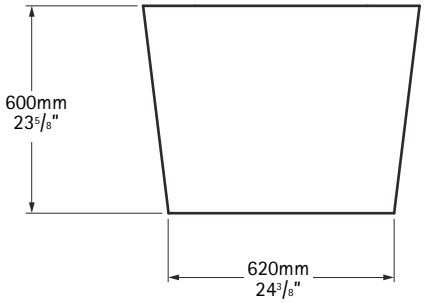

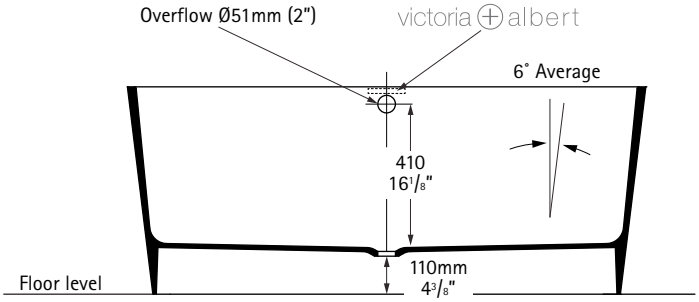

edge+K17

SECTION A-A

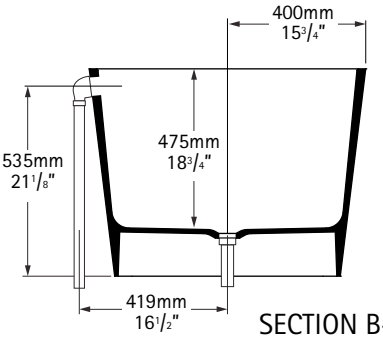

SECTION B-B

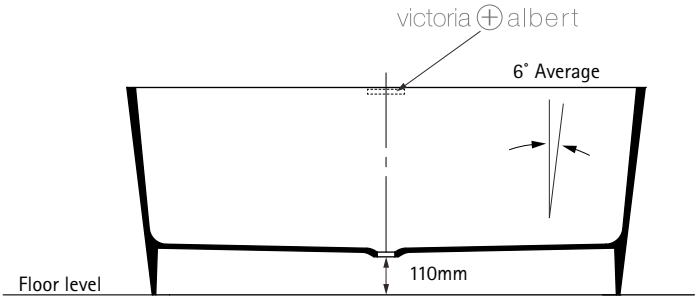

edge+K12/K40

SECTION A-A

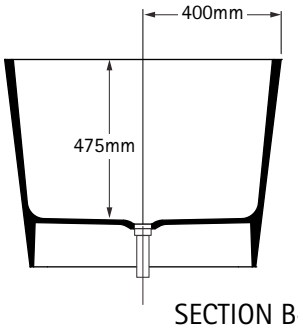

SECTION B-B

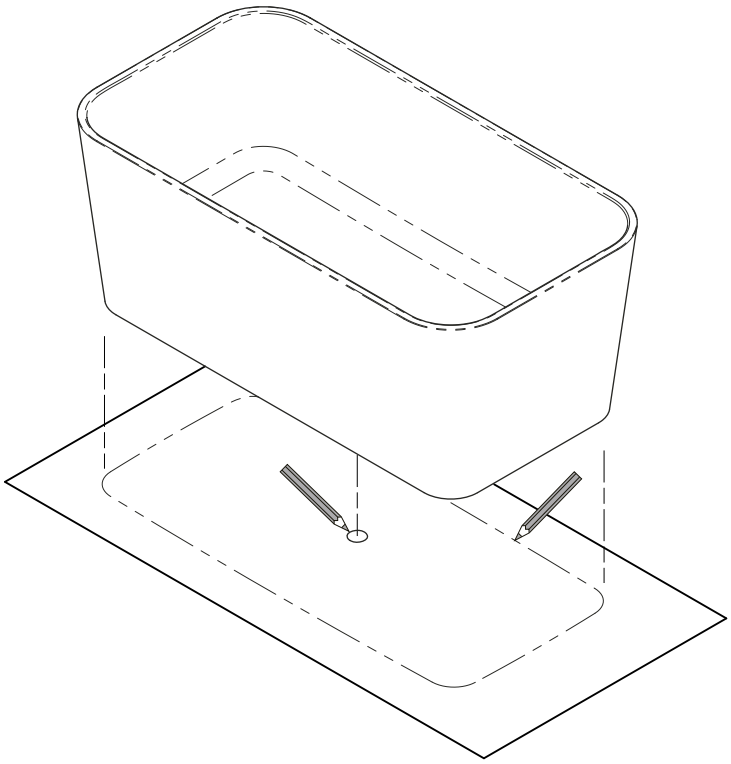

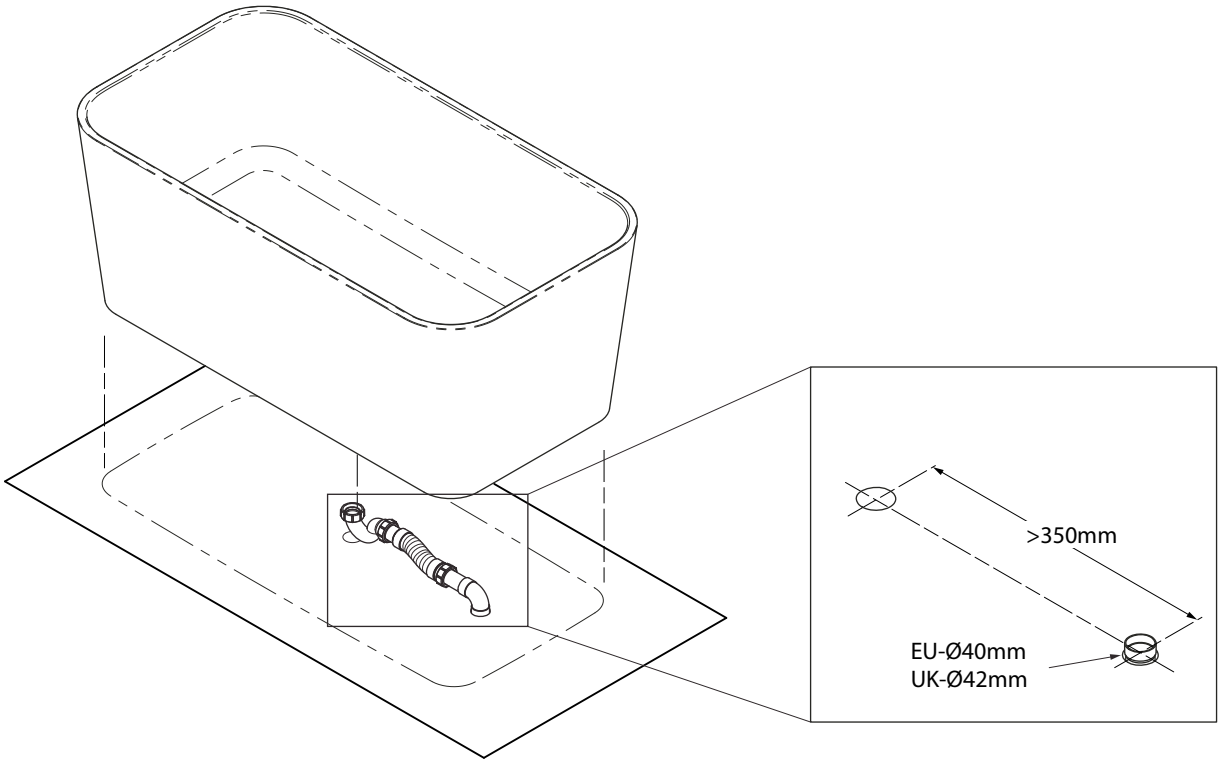
>350mm
EU-Ø40mm
UK-Ø42mm

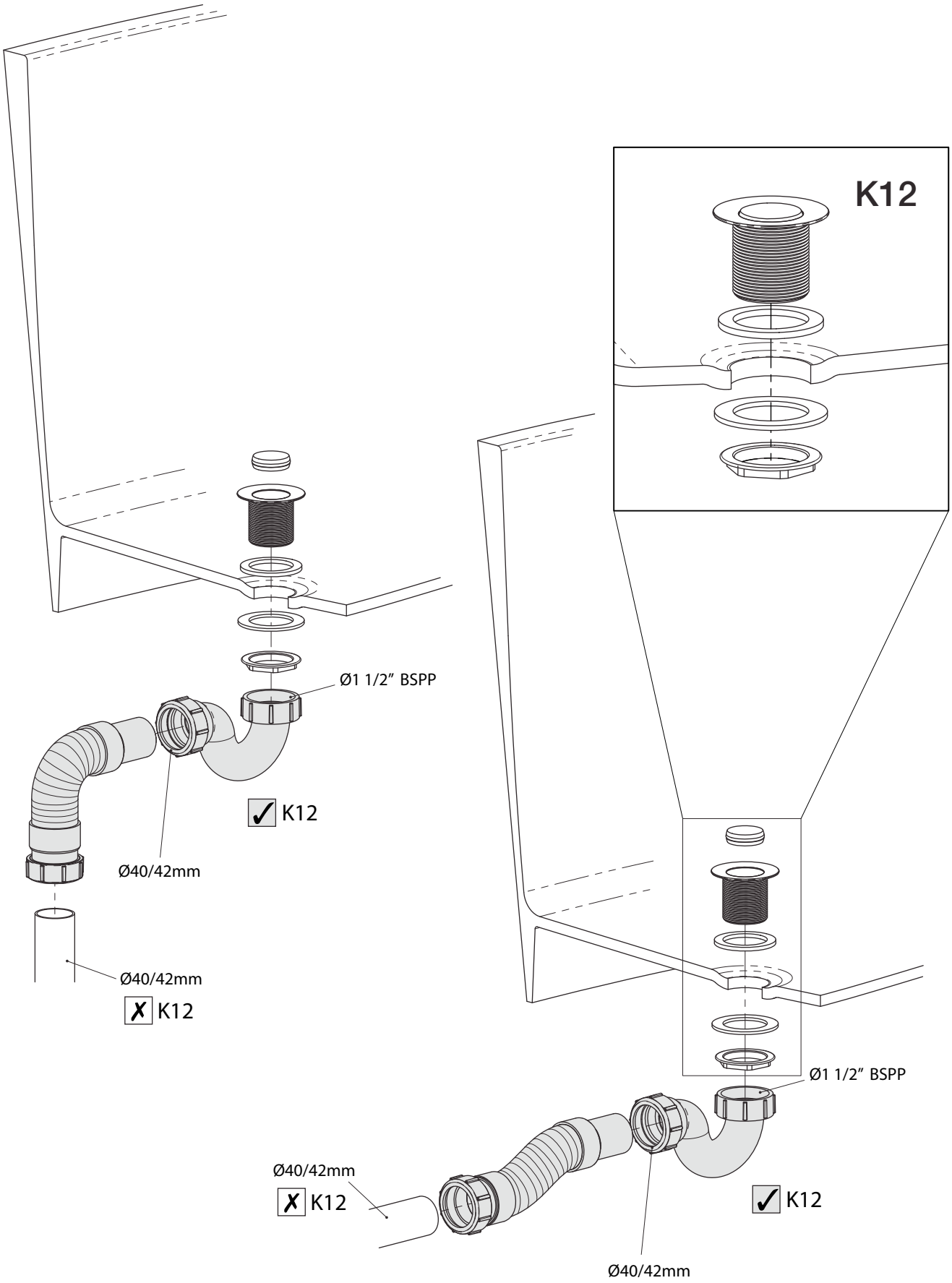
K12
Ø1 1/2" BSPP
✓ K12
Ø40/42mm
Ø40/42mm
✗ K12
Ø1 1/2" BSPP
Ø40/42mm
✗ K12
✓ K12
Ø40/42mm

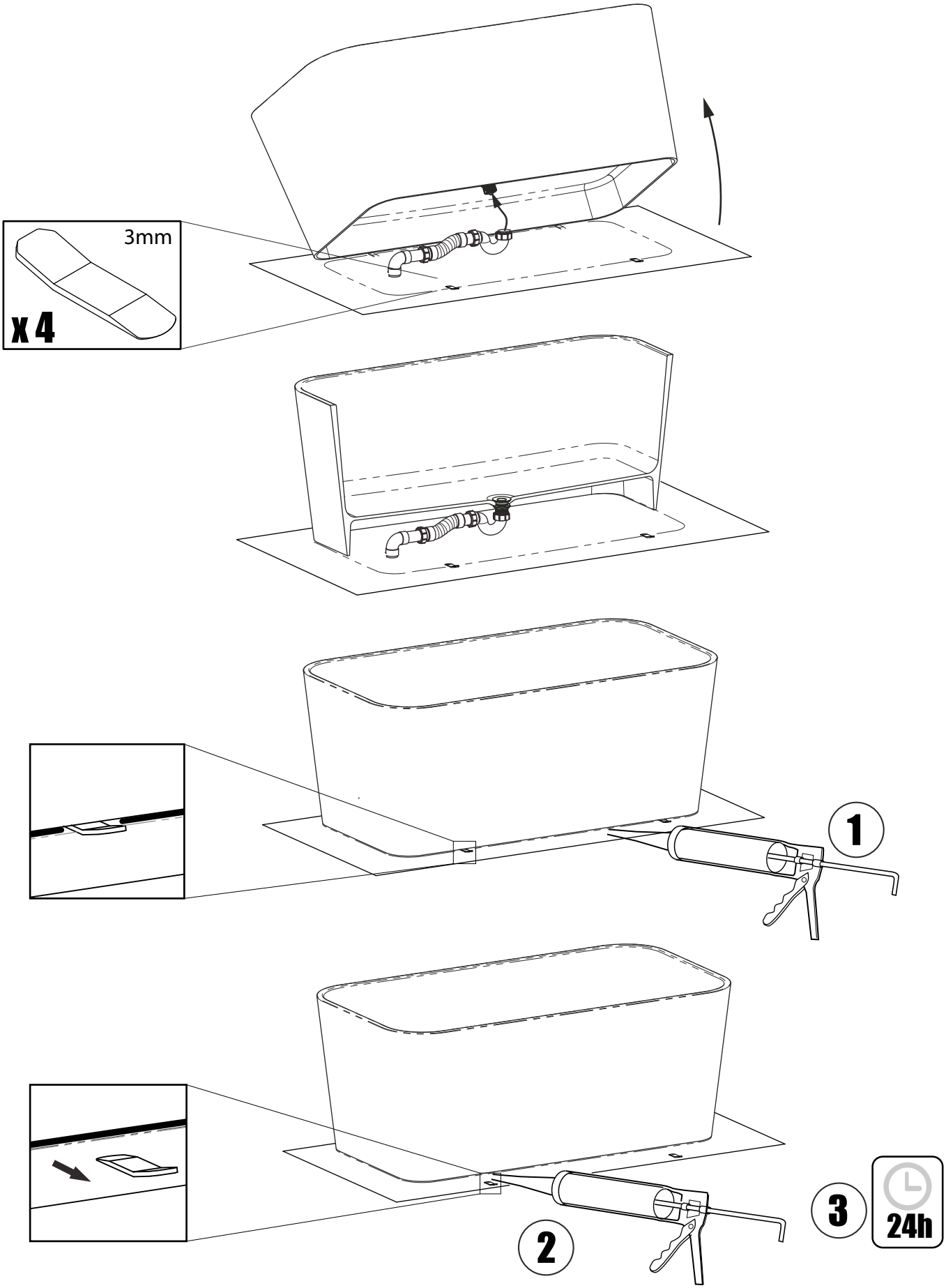
3mm
x 4
1
2
3
24h

Drilling Overflow Holes

victoria + albert®

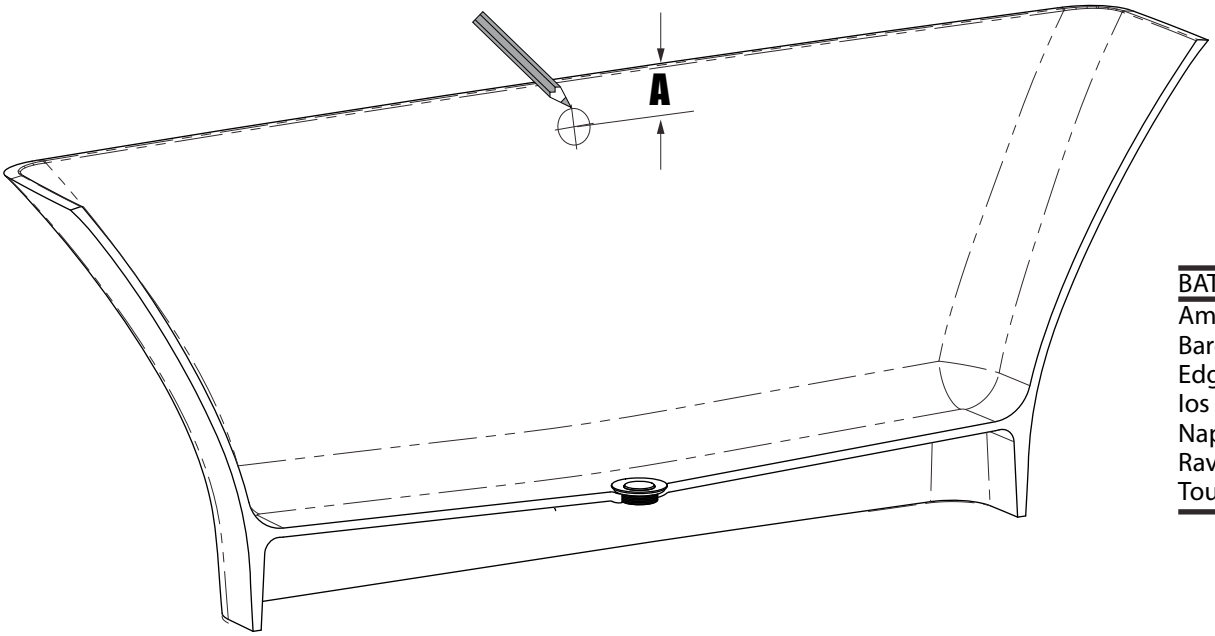

BATH	A (MIN)
Amalfi	135mm
Barcelona	50mm
Edge	50mm
Ios	50mm
Napoli	50mm
Ravello	65mm
Toulouse	80mm

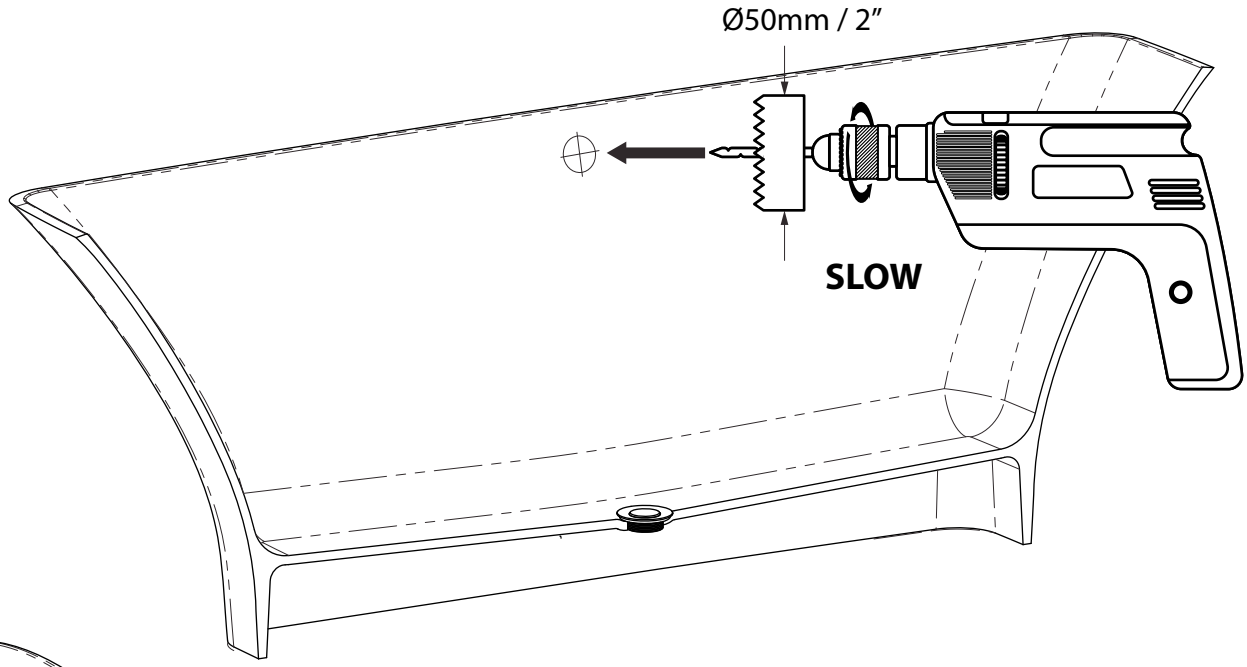

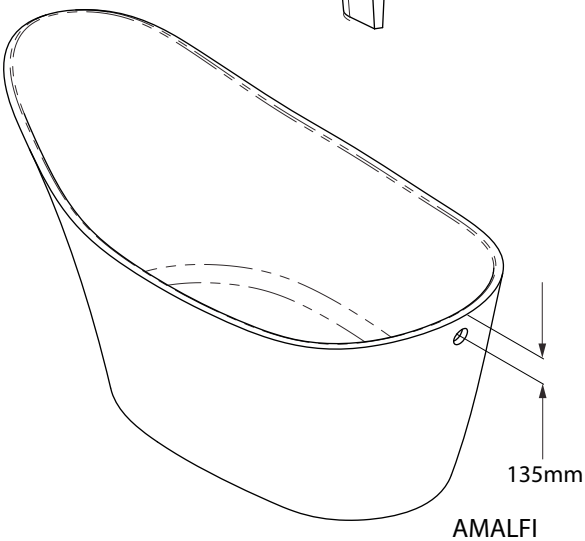

AMALFI